零 件 本

高速自動加油系統縫袋口機

HIGH SPEED BAG CLOSING MACHINE WITH
AUTO-LUBRICATION SYSTEM

PARTS BOOK

N980A (1-NEEDLE)
N980AW (2-NEEDLE)
N980AC (1-NEEDLE)
N980ACW (2-NEEDLE)
N980AP (1-NEEDLE)

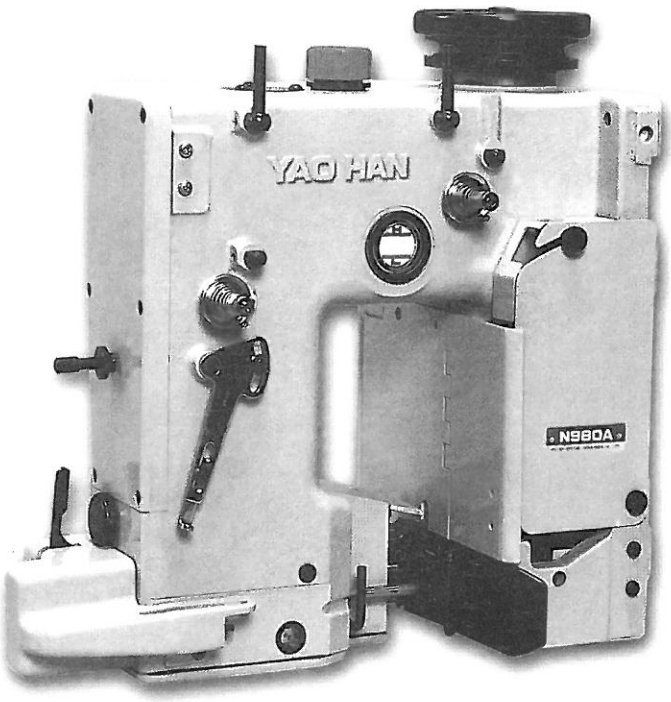

YAOHAN®
耀瀚股份有限公司
YAO HAN INDUSTRIES CO., LTD.

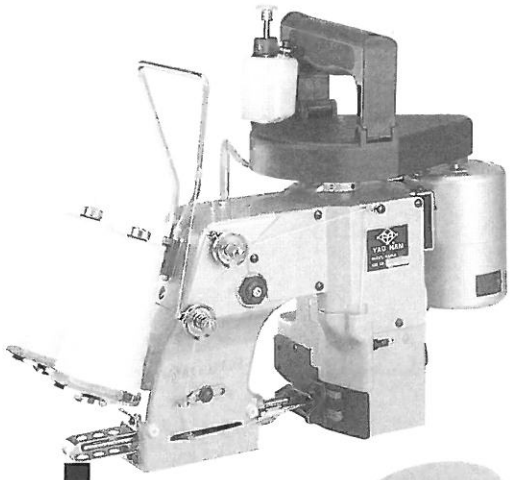

規 格 Specification

機 種 Model	縫 速 Speed	縫 距 Stich	使用針 Needle	切 線 Cutter	線 數 No. of thead	重 量 Weight	馬 達 Drive moter
F300A	300~400 Bags/Hour	7.2mm	FD-5 #24.25	自動切線裝置 Automatic thread cutter	1	5.5kg	60W 50/60Hz 1ph 12V, 24V, 110V, 220V or 240V (確請指定) (Please specify one when ordering)
N600A	250~350 Bags/Hour	7.2mm (8.2mm)	DN X 1 #25			6kg	
N600H	350~450 Bags/Hour						
F302A	300~400 Bags/Hour	7.2mm	FD-5 #24.25		2	5.8kg	
N602A	250~350 Bags/Hour	7.2mm (8.2mm)	DN X 1 #25			6.3kg	
N602H	350~450 Bags/Hour						
N320A	160~230 Bags/Hour	8.5mm				6.4kg	

N320A

DOUBLE THREAD CHAIN STITCH with one each needle and looper
雙線鏈縫

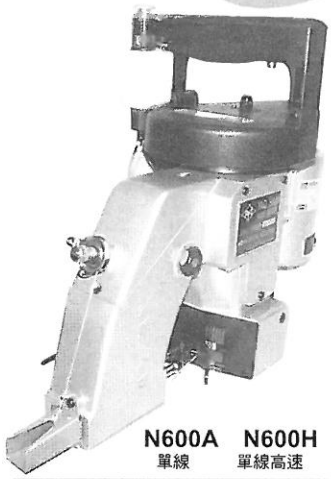

N600A 單線 **N600H** 單線高速

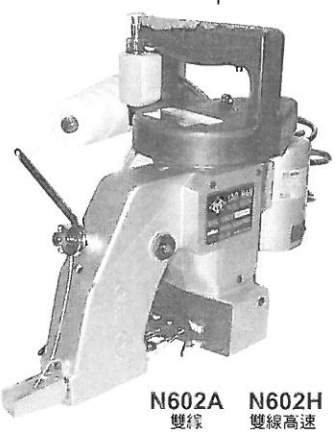

N602A 雙線 **N602H** 雙線高速

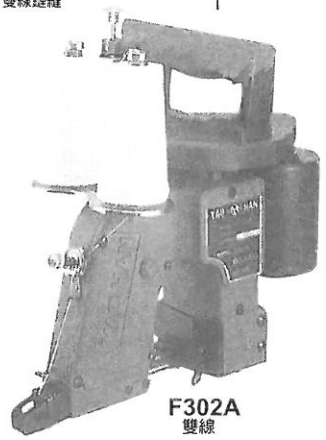

F302A 雙線

MN600A **MF300A**

活動式縫袋口機 Moved bag closing machine.

用途:可用於紙袋、麻袋、塑膠編織袋、麵粉袋、棉袋、PP袋和PE袋等
For : Bag closing all kinds of paper, cotton PP/PE, hessian, jute, etc.

- 本機輕巧、操作方便、可任意移動工作地點，設有選擇性腳踏開關，方便起動及停止機械。
- This machine is very easy to handle and convenience to move a place when you need.
- An optional foot switch is availabe to control sewing head start and stop functions.
- Can increase more production.

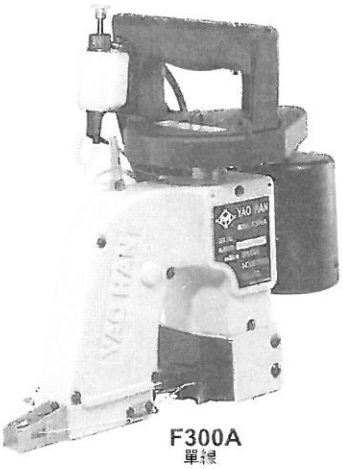

F300A 單線

- 最高速度1600~1800spm
- 高效性技術革命
- 特殊材料安全手把
- 高壓強力自動加油系統
- 自動切線
- 低音轉動
- 維護費用低
- 可用於紙袋、麻袋、塑膠編織袋、PP袋和PE袋等

- Max sewing speed 1600~1800spm
- More effective for techanical revolution
- Special material for satety plastic handle
- Superior powerful lubricator
- Automatic thread trimmer
- Lower noise
- Minimum Maintenance
- For bag closing all kinds of paper, cotton, pp/pe, heasian, jute, etc.

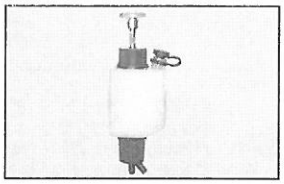

強力高壓自動加油系統，油管伸至各傳動主件，機械運轉時縫製工作更加順暢。
Oil pump lubrication system, oil line direct lubricant to main moving parts.

CONTENTS 目　次

1. Miscellaneous Covers Parts.....1

2. Thread Tension & Oiling Parts..... 2

3. Bushing Parts..... 3

4. Needle Bar & Crank Shaft Parts..... 4

5. Presser Foot Parts.....5

6. Looper Rocker & Connecting Rod Parts..... 6

7. Feed Driving & Throat Plate Parts.....7

8. Cutter Parts (For N980AC, N980ACW).....8

9. Cutter Parts (For N980A, N980AW).....9

10. Thread Tension & Needle Thread Oiler

(For N980AW, N980ACW).....10

11.N980AW, N980ACW Parts.....11

12. Accessories.....12

BAG CLOSER PARTS FOR N980A,N980AC

1. MISCELLANEOUS COVERS PARTS

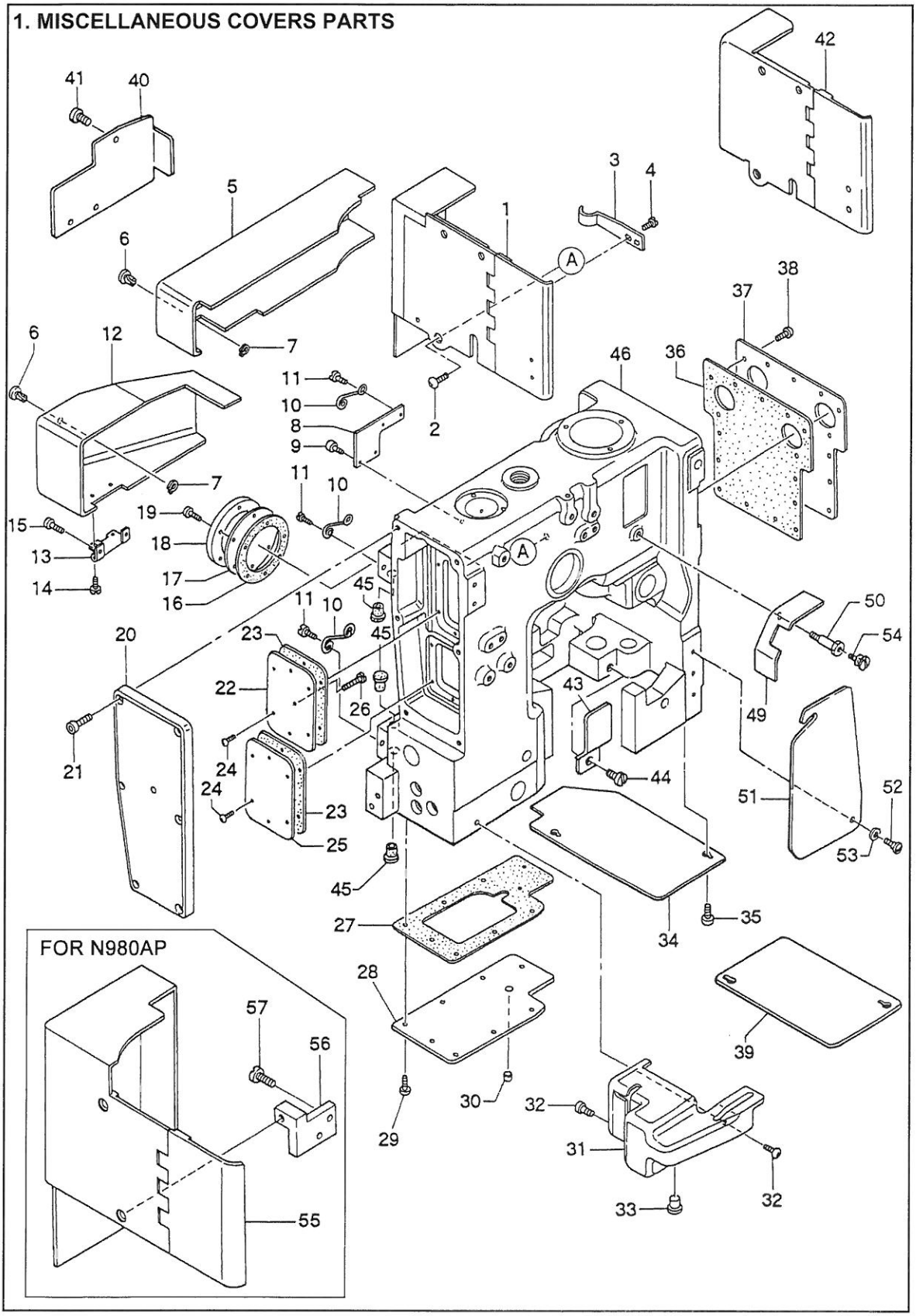

BAG CLOSER PARTS FOR N980A,N980AC

ITEM		PART NO.	DESCRIPTION
1	@	9800101	CLOTH PLATE
2		9800102	SCREW
3		9800103	CLOTH PLATE SPRING
4		6001009	SCREW
5		9800105	CYLINDER COVER
6		9800106	FASTENER HEAD
7		9800107	STOP RING
8		9800108	FASTENER SPRING BASE
9		9800109	SCREW
10		9800110	FASTENER SPRING
11		9800111	SCREW
12	@	9800112	CUTTER COVER
13	@	9800113	HINGE
14	@	9800111	SCREW
15	@	6001009	SCREW
16		9800116	GASKET
17		9800117	SIDE COVER
18		9800118	SIDE COVER RETAINER
19		9800119	SCREW
20		9800120	BODY HEAD COVER
21		9800121	SCREW
22		9800122	TOP COVER A
23		9800123	GASKET
24		9800119	SCREW
25		9800125	TOP COVER B
26		9800126	SCREW
27		9800127	GASKER
28		9800128	FACE PLATE, UPPER
29		9800129	SCREW
30		9800130	PLUG
31		9800131	NEEDLE BAR COVER
32		9800132	SCREW
33		6001215	RUBBER BUSHING
34	@	9800134	FACE PLATE, LOWER
35		9800135	SCREW
36		9800136	GASKET
37		9800137	INSIDE COVER
38		9800138	SCREW
39	#	9800139	FACE PLATE, LOWER
40	● #	9800140	SIDE COVER
41	#	6001009	SCREW
42	#	9800142	CLOTH PLATE
43		9800143	LOOPER THREAD COVER
44		6001009	SCREW
45	#	9800145	RUBBER BUSHING
46		9800146	MAIN FRAME
49		9800149	LOOPER THREAD TAKE-UP COVER B
50		9800150	POST
51		9800151	LOOPER THREAD TAKE-UP COVER A
52		9800152	SCREW
53		9800153	WASHER
54		9800154	SCREW
55	●	9800155	CLOTH PLATE
56	●	9800156	CLOTH PLATE BASE
57	●	9800407	SCREW

\# FOR N980A
@ FOR N980AC
● FOR N980AP

BAG CLOSER PARTS FOR N980A,N980AC

2. THREAD TENSION & OILING PARTS

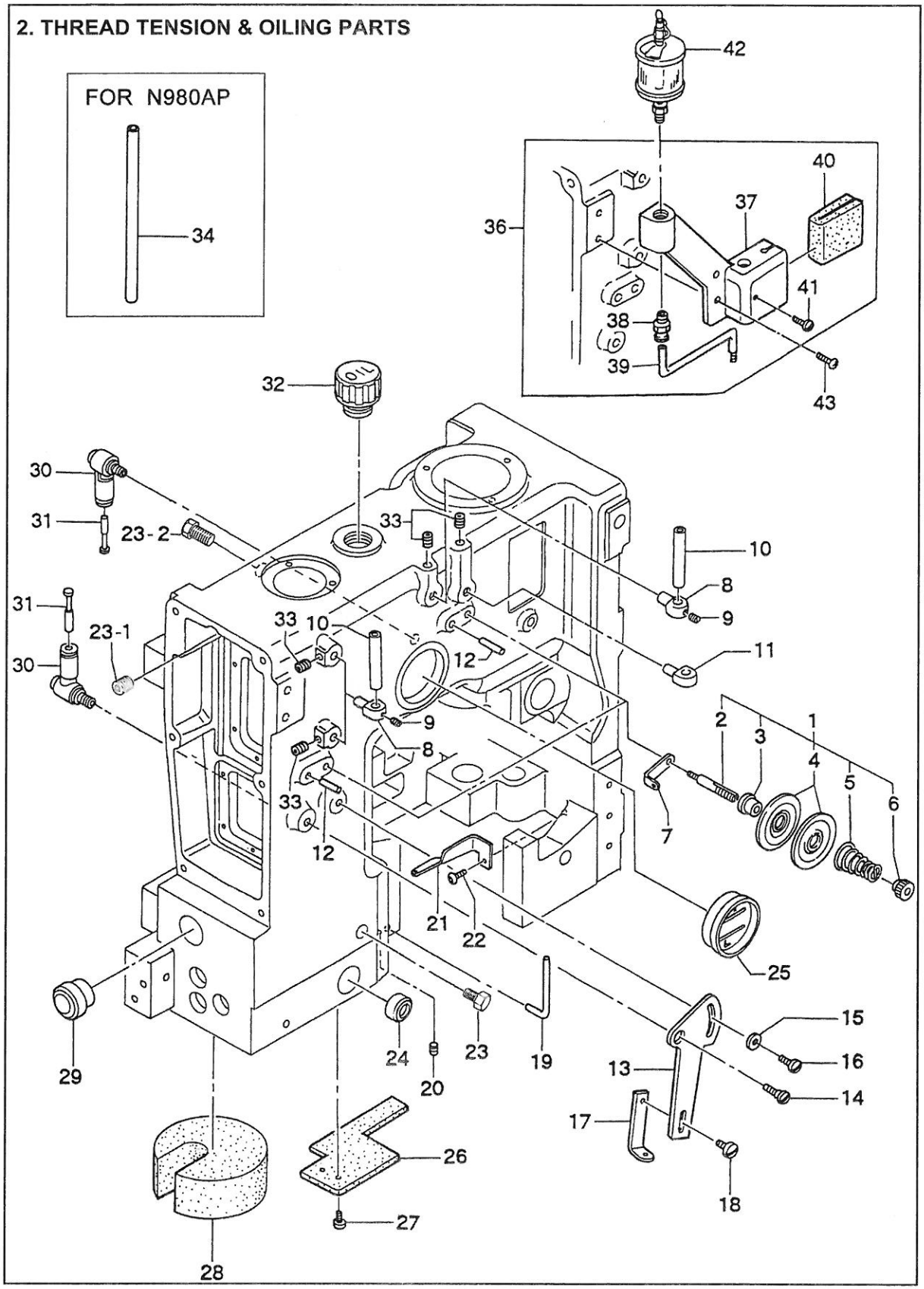

BAG CLOSER PARTS FOR N980A,N980AC

ITEM	PART NO.	DESCRIPTION
1	9800201	THREAD TENSION ASM.
2	9800202	TENSION POST
3	9800203	TENSION POST FERRULE
4	9800204	TENSION DISC
5	9800205	TENSION SPRING
6	9800206	TENSION NUT
7	6001010	THREAD GUIDE
8	9800208	FRAME THREAD EYELET SUPPORT
9	9800209	SCREW
10	9800210	FRAME THREAD EYELET
11	9800211	FRAME THREAD EYELET
12	9800212	TENSION DISC STOP PIN
13	9800213	NEEDLE THREAD CONTROLLER A
14	9800214	SCREW
15	6001416	WASHER
16	6001435	SCREW
17	9800217	NEEDLE THREAD CONTROLLER B
18	6001016	SCREW
19	9800219	NEEDLE THREAD GUIDE
20	9800220	SCREW
21	9800221	LOOPER THREAD GUIDE
22	9800222	SCREW
23	9800223	SCREW
23-1	9800223-1	SCREW
23-2	9800223-2	SCREW
24	9800224	OIL GAUGE
25	9800225	OIL GAUGE
26	9800226	FELT
27	9800227	SCREW
28	9800228	FENCE
29	9800229	RUBBER BUSHING
30	9800230	TUBE FITTING, ELBOW
31	9800231	TUBE FITTING, PLUG
32	9800232	PLUG
33	9800220	SCREW
34 ●	9800134	FACE PLATE, LOWER
36 *	9800236	NEEDLE THREAD OILER ASM.
37 *	9800237	NEEDLE THREAD OILER BASE
38 *	9800238	TUBE FITTING, STRAIGHT
39 *	9800239	OIL TUBE
40 *	9800240	FELT
41 *	6001023	SCREW
42 *	9800242	OILER
43 *	9800138	SCREW

● FOR N980AP

* SPECIAL ORDER

BAG CLOSER PARTS FOR N980A,N980AC

3. BUSHING PARTS

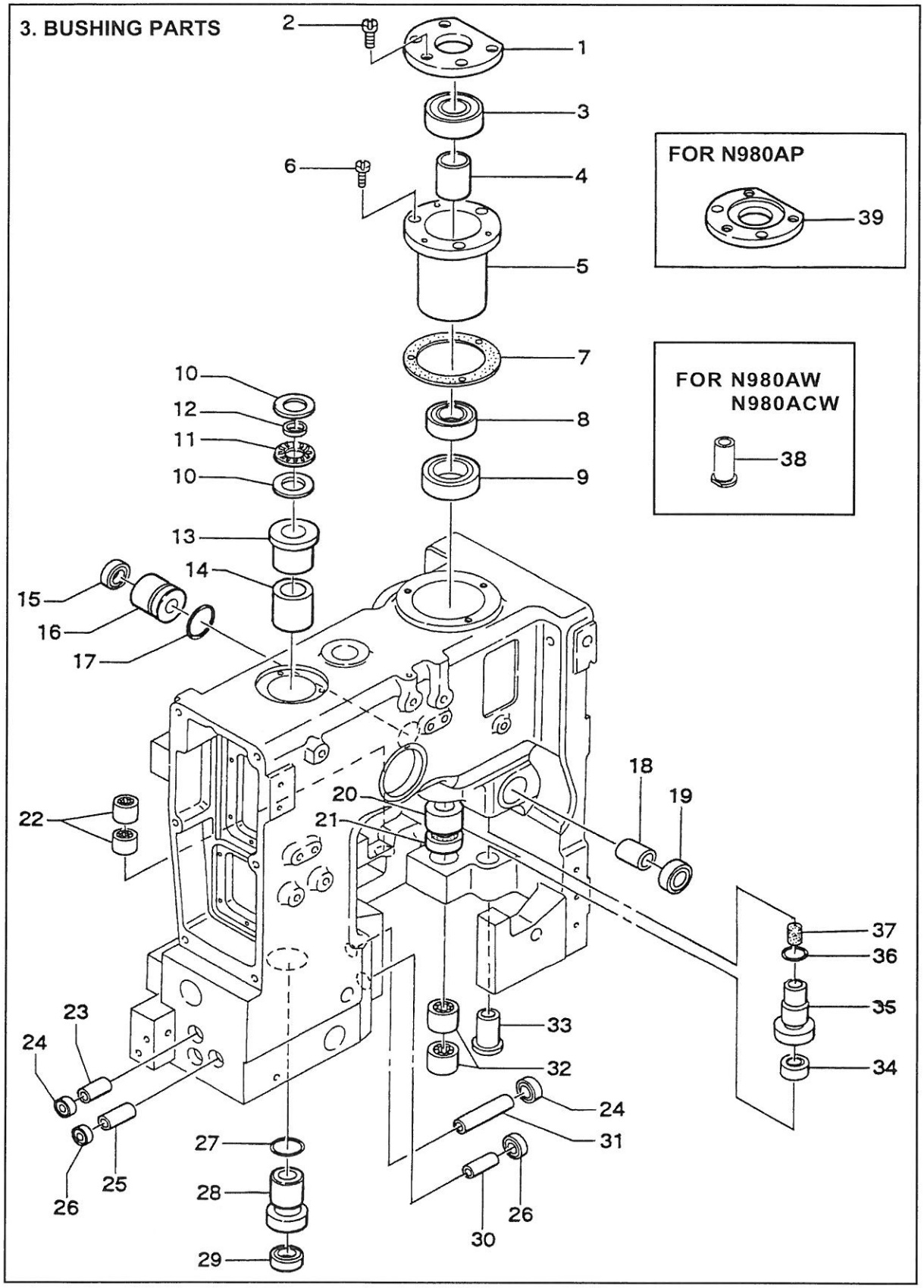

BAG CLOSER PARTS FOR N980A,N980AC

ITEM	PART NO.	DESCRIPTION
1	9800301	BEARING HOLDER
2	9800302	SCREW
3	9800303	BALL BEARING
4	9800304	COLLAR A
5	9800305	CRANK SHAFT BUSHING HOUSING
6	3200622	SCREW
7	9800307	GASKET
8	9800308	BALL BEARING
9	9800309	OIL SEAL
10	9800310	THRUST WASHER
11	9800311	THRUST BEARING
12	9800312	RING, PILOT
13	9800313	ARM ROCKER SHAFT BUSHING, REAR
14	9800314	ARM ROCKER SHAFT BUSHING, MIDDLE
15	9800315	OIL SEAL
16	9800316	LOOPER DRIVE LEVER SHAFT BUSHING, REAR
17	9800317	"O" RING
18	9800318	LOOPER DRIVE LEVER SHAFT BUSHING, FRONT
19	9800319	OIL SEAL
20	9800320	CRANK SHAFT BUSHING, MIDDLE
21	9800321	OIL SEAL
22	9800322	NEEDLE BEARING
23	9800323	PRESSER BAR BUSHING, UPPER
24	9800324	OIL SEAL
25	9800325	NEEDLE BAR BUSHINE, UPPER
26	9800326	OIL SEAL
27	9800317	"O" RING
28	9800328	ARM ROCKER SHAFT BUSHING, FRONT
29	9800329	OIL SEAL
30	9800330	NEEDLE BAR BUSHING, LOWER
31	9800331	PRESSER BAR BUSHING, LOWER
32	9800332	NEEDLE BEARING
33	9800333	LOOPER ROCKER SHAFT BUSHING, FRONT
34	9800315	OIL SEAL
35	9800335	LOOPER ROCKER SHAFT BUSHING, REAR
36	9800336	"O" RING
37	9800337	FILTER
38 △ ▲	9800338	LOOPER ROCKER SHAFT BUSHING, FRONT
39 ●	9800438	BEARING HOLDER

△ FOR N980AW
▲ FOR N980ACW
● FOR N980AP

BAG CLOSER PARTS FOR N980A,N980AC

4. NEEDLE BAR & CRANK SHAFT PARTS

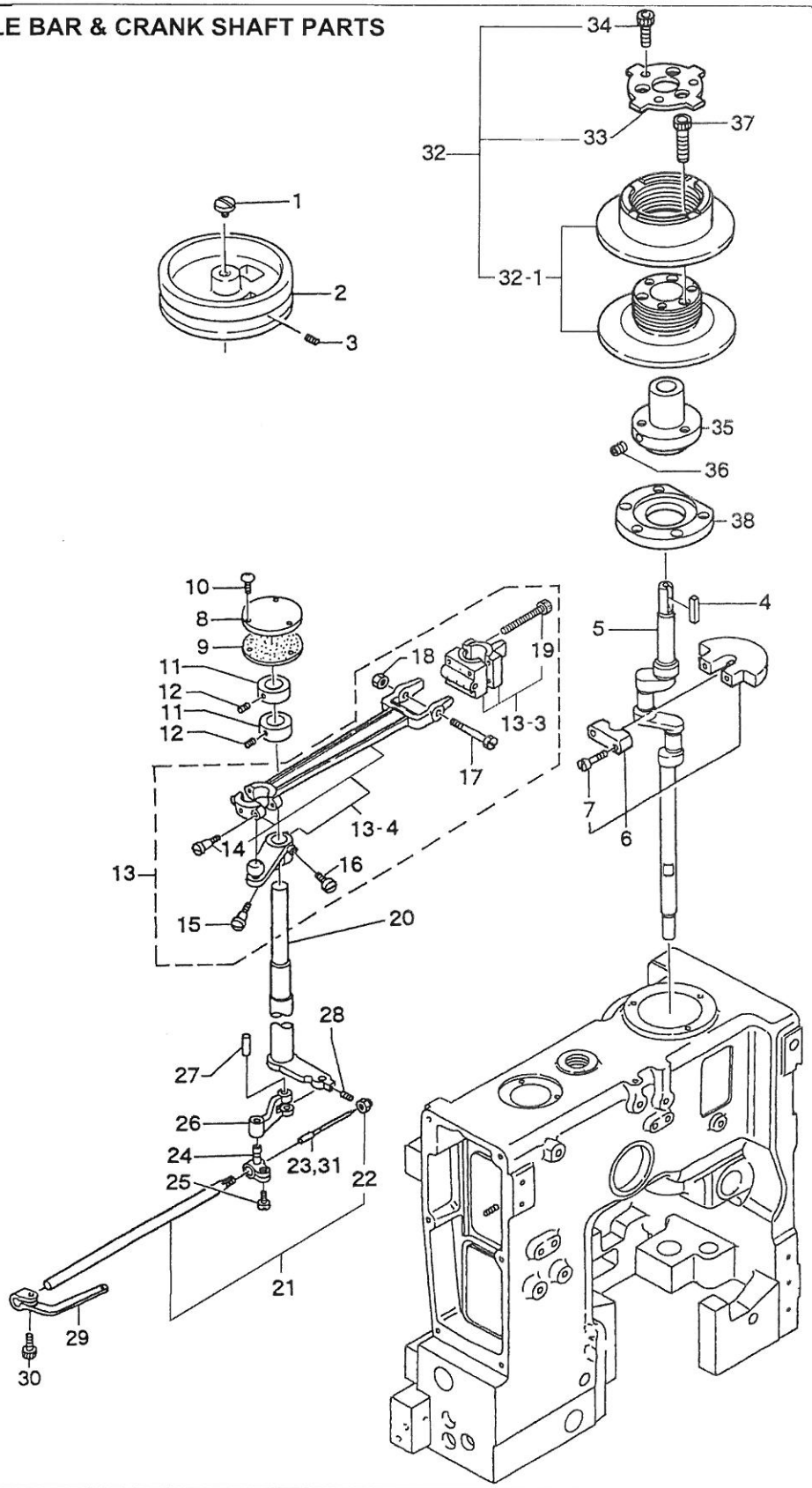

BAG CLOSER PARTS FOR N980A,N980AC

ITEM		PART NO.	DESCRIPTION
1		9800401	SCREW
2	#	9800402	PULLEY
3	#	9800403	SCREW
4		9800404	KEY
5		9800405	CRANK SHAFT
6		9800406	BALANCE WEIGHT ASM.
7		9800407	SCREW
8		9800408	REAR COVER
9		9800409	GASKET
10		9800138	SCREW
11		9800411	COLLAR
12		9800412	SCREW
13		9800413	CRANK SHAFT CONNECTING ROD ASM.
13-3		9800413-3	SLIDE BLOCK
13-4		9800413-4	CRANK SHAFT CONNECTING ROD
14		3200608	SCREW
15		9800415	SPOT SCREW
16		9800416	SCREW
17		9800417	SCREW
18		9800418	NUT
19		9800419	SCREW
20		9800420	ARM ROCKER SHAFT
21		9800421	NEEDLE BAR ASM.
22		9800422	NEEDLE CLAMP NUT
23		9800423	NEEDLE
24		9800424	NEEDLE BAR CONNECTING STUD
25		6001009	SCREW
26		9800426	NEEDLE BAR CONNECTING LINK
27		9800427	NEEDLE BAR CONNECTING LINK PIN
28		9800428	SCREW
29		9800429	NEEDLE THREAD TAKE-UP
30		9800109	SCRW
31	●	9800431	NEEDLE
32	@●	9800432	VARIABLE DIAMETER PULLEY ASM.
32-1	@●	9800432-1	VARIABLE DIAMETER PULLEY
33	@●	9800433	PRESSER PLATE
34	@●	9800121	SCRW
35	@●	9800435	PULLEY HUB
36	@●	9800436	SCREW
37	@●	9800437	SCREW
38		9800438	BEARING HOLDER

\# FOR N980A
@ FOR N980AC
● FOR N980AP

BAG CLOSER PARTS FOR N980A,N980AC

5.PRESSER FOOT PARTS

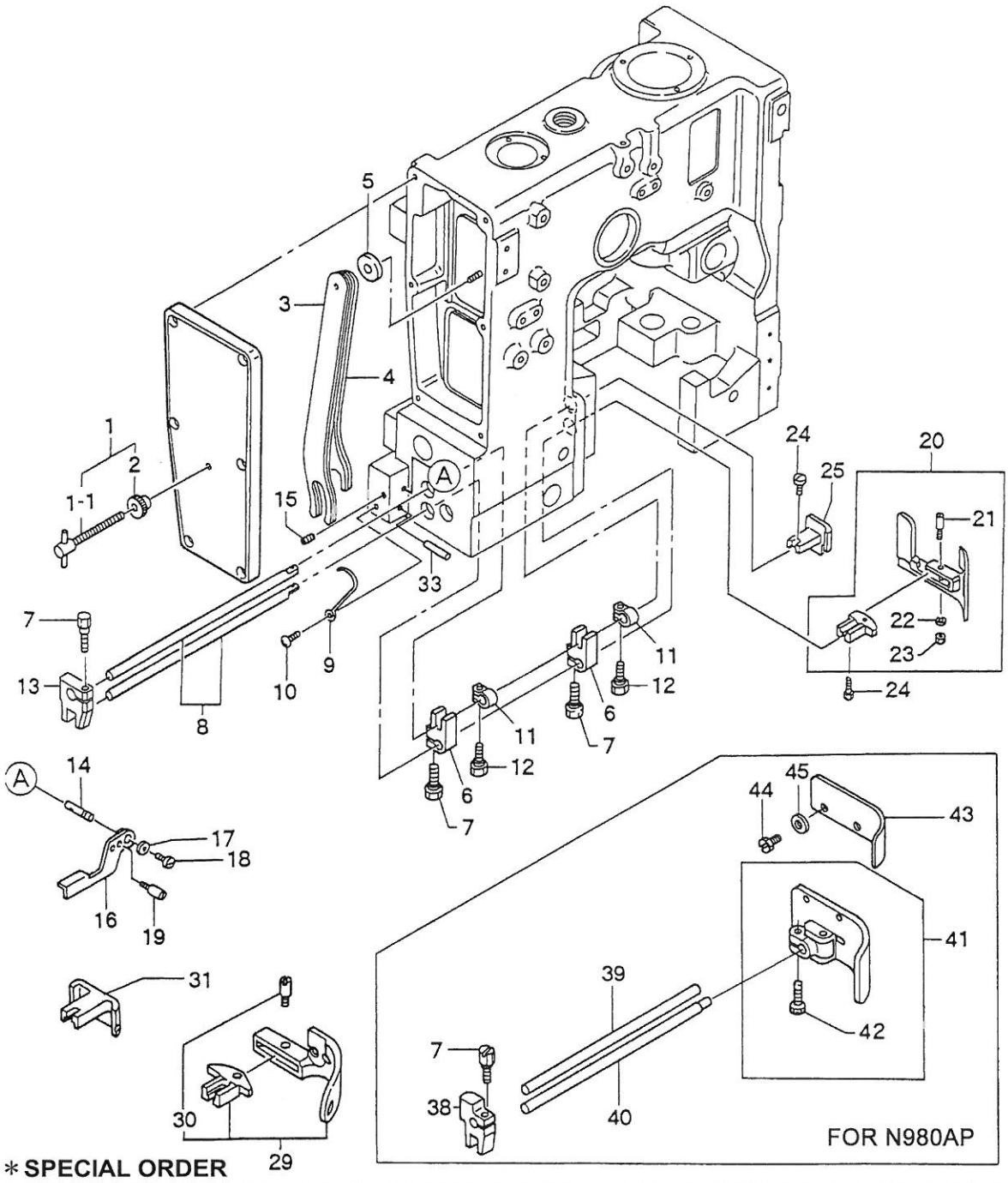

* SPECIAL ORDER

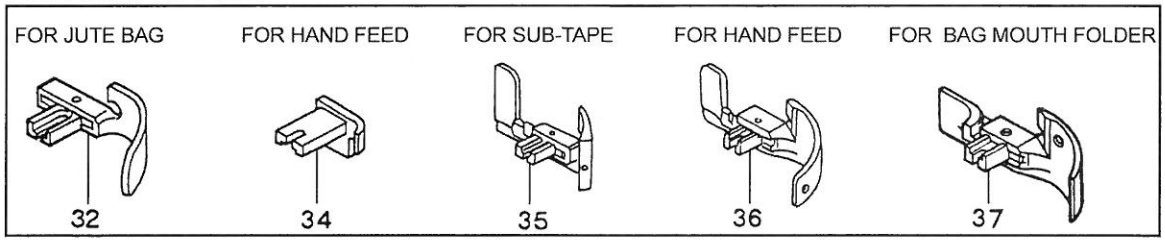

BAG CLOSER PARTS FOR N980A,N980AC

ITEM	PART NO.	DESCRIPTION
1	9800501	PRESSER SRPING REGULATOR SCREW ASM.
1-1	9800501-1	PRESSER SRPING REGULATOR SCREW
2	9800502	NUT
3	9800503	PRESSER BAR SPRING, LARGE
4	9800504	PRESSER BAR SPRING, SMALL
5	9800505	COLLAR
6	9800506	PRESSER BAR LIFTING BRACKET, LEFT
7	9800507	SCREW
8	9800508	PRESSER BAR
9	9800509	SPRING
10	9800222	SCREW
11	9800511	PRESSER BAR SPRING ADJUSTER
12	9800507	SCREW
13	9800513	PRESSER BAR LIFTING BRACKET
14	9800514	PRESSER BAR LIFTER HINGE STUD
15	9800515	SCREW
16	9800516	PRESSER BAR LIFTER
17	9800517	WASHER
18	6001016	SCREW
19	9800519	SCREW
20 @	9800520	LEFT PRESSER FOOT ASM.
21 @	9800521	SCREW
22	9800522	SPRING WASHER
23	9800523	NUT
24	9800524	SCREW
25 @	9800525	RIGHT PRESSER FOOT
29 #	9800529	LEFT PRESSER FOOT ASM.
30 #	9800530	SCREW
31 #	9800531	RIGHT PRESSER FOOT
32 * #	9800532	LEFT PRESSER FOOT ASM. FOR JUTE BAG
33	9800533	PIN
34 * @	9800534	PRESSER FOOT, RIGHT FOR HAND FEED
35 * @	9800535	PRESSER FOOT ASS'Y, LEFT FOR SUB-TAPE
36 * @	9800536	PRESSER FOOT ASS'Y, LEFT FOR HAND FEED
37 * @	9800537	PRESSER FOOT ASS'Y, LEFT FOR BAG MOUTH FOLDER
38 ●	9800538	PRESSER BAR RIGHT LIFTING BRACKET
39 ●	9800539	PRESSER BAR RIGHT
40 ●	9800540	PRESSER BAR LEFT
41 ●	9800541	PRESSER FOOT ASS'Y
42 ●	9800636	SCREW
43 ●	9800543	BAG GUIDE
44 ●	9800544	SCREW
45 ●	6001416	WASHER

FOR N980A ● FOR N980AP

@ FOR N980AC * SPECIAL ORDER

BAG CLOSER PARTS FOR N980A,N980AC

6.LOOPER ROCKER & CONNECTING ROD PARTS

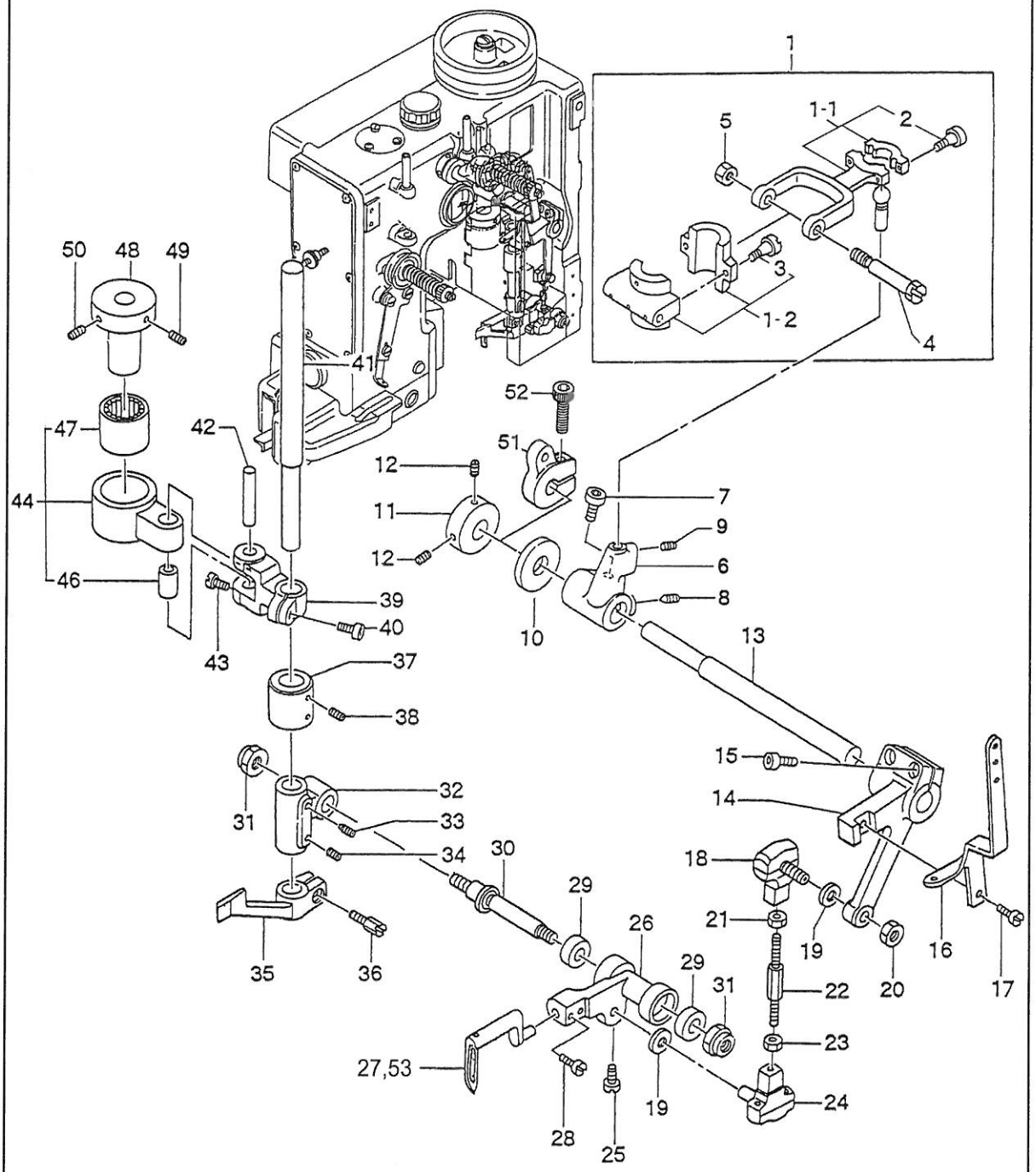

BAG CLOSER PARTS FOR N980A,N980AC

ITEM	PART NO.	DESCRIPTION
1	9800601	LOOPER BELL CRANK CONNECTION ROD ASM.
1-1	9800601-1	LOOPER BELL CRANK CONNECTION ROD
1-2	9800601-2	SLIDE BLCOK
2	3200815	SCREW
3	3200608	SCREW
4	9800417	SCREW
5	9800418	NUT
6	9800606	LOOPER DRIVE LEVER ROCKET
7	9800607	SCREW
8	9800608	SCREW
9	9800428	SCREW
10	9800610	THRUST COLLAR
11 @	9800611	SET COLLAR
12 @	9800612	SCREW
13	9800613	LOOPER DRIVE LEVER SHAFT
14	9800614	LOOPER DRIVE LEVER
15	9800615	SCREW
16	9800616	LOOPER THREAD TAKE-UP
17	6001435	SCREW
18	9800618	LOOPER CONNECTING ROD BALL JOINT, RIGHT
19	9800619	WASHER
20	9800620	NUT
21	9800621	NUT
22	9800622	LOOPER CONNECTING ROD
23	9800623	NUT
24	9800624	LOOPER CONNECTING ROD BALL JOINT, LEFT
25	6001009	SCREW
26	9800626	LOOPER ROCKER
27	9800627	LOOPER
28	6001430	SCREW
29	9800629	BALL BEARING
30	9800630	LOOPER ROCKER CONE STUD
31	9800631	NUT
32	9800632	LOOPER ROCKER FRAME
33	9800633	SCREW
34	9800428	SCREW
35	9800635	LOOPER RETAINER
36	9800636	SCREW
37	9800637	SET COLLAR
38	9800638	SCREW
39	9800639	LOOPER ROCKER SHAFT ARM
40	9800640	SCREW
41	9800641	LOOPER ROCKER SHAFT
42	9800642	LINK PIN
43	6001009	SCREW
44	9800644	BEARING CASE ASM.
46	9800646	BEARING
47	9800647	BEARING
48	9800648	LOOPER AVOID ECCENTRIC
49	9800649	SCREW
50	9800650	SCREW
51 #	9800651	KNIFE LEVER A
52 #	9800652	SCREW
53 ●	9800653	LOOPER

\# FOR N980A
@ FOR N980AC
● FOR N980AP

BAG CLOSER PARTS FOR N980AC, N980ACW

8. CUTTER PARTS (FOR N980AC, N980ACW)

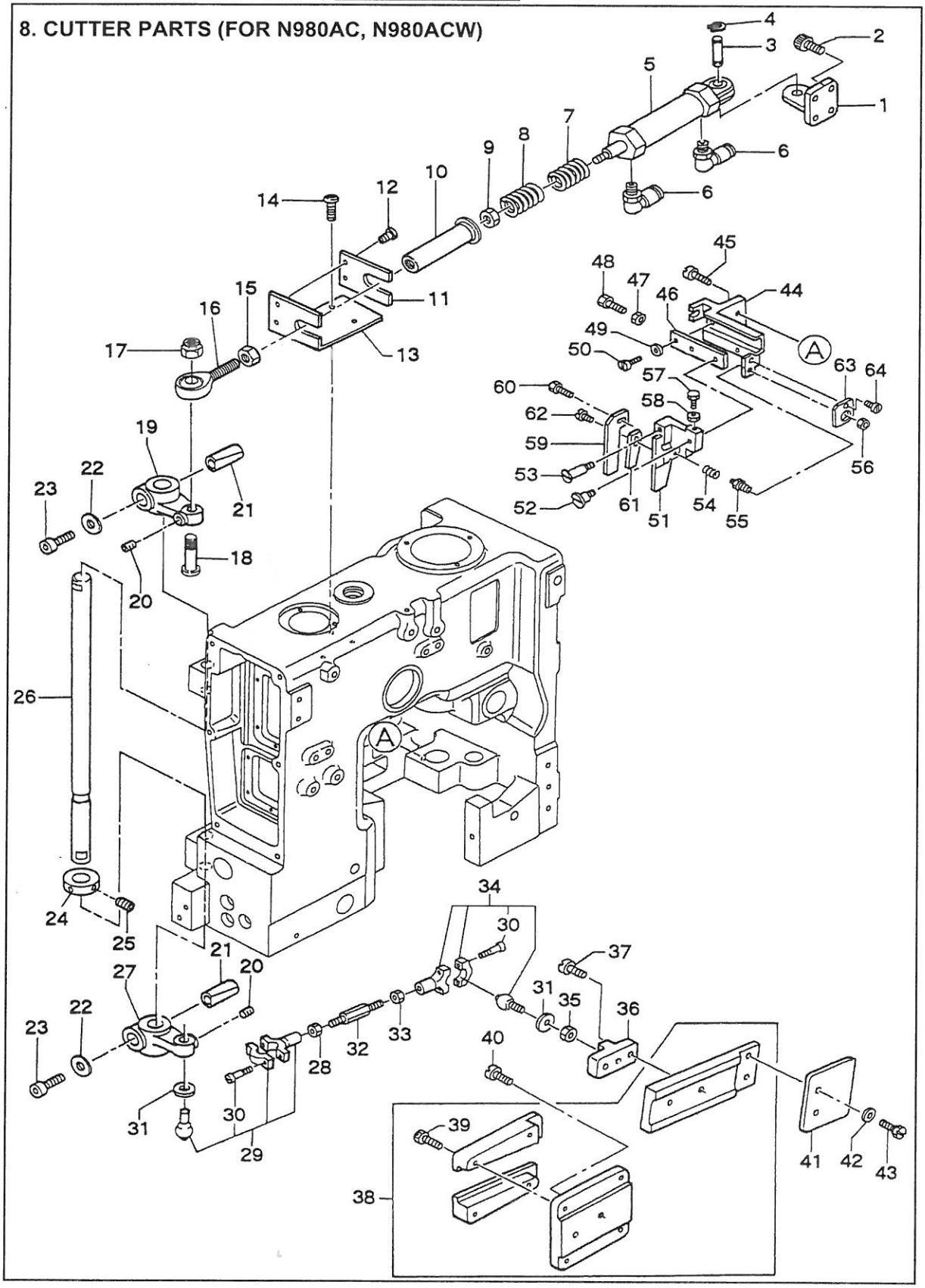

BAG CLOSER PARTS FOR N980AC, N980ACW

ITEM	PART NO.	DESCRIPTION
1	9800801	AIR CYLINDER BASE
2	9800802	SCREW
3	9800803	PIN
4	9800107	STOP RING
5	9800805	AIR CYLINDER
6	9800806	TUBE FITTING, ELBOW
7	9800807	SPRING
8	9800808	SPRING
9	9800809	NUT
10	9800810	JOINT ROD
11	9800811	SPACER
12	6001009	SCREW
13	9800813	JOINT ROD GUIDE
14	9800132	SCREW
15	9800815	NUT
16	9800816	ROD END
17	9800817	NUT
18	9800818	CUTTER CONNECTING LEVER PIN
19	9800819	CUTTER CONNECTING LEVER
20	9800428	SCREW
21	9800821	COTTER PIN
22	9800822	WASHER
23	9800615	SCREW
24	9800411	COLLAR
25	9800412	SCREW
26	9800826	CUTTER ROCKER SHAFT
27	9800827	CUTTER CONNECTING LEVER
28	9800623	NUT
29	9800829	LEFT BALL JOINT ASM.
30	3200815	SCREW
31	9800619	WASHER
32	9800832	CUTTER CONNECTING ROD
33	9800621	NUT
34	9800834	RIGHT BALL JOINT ASM.
35	9800620	NUT
36	9800836	BALL HOLDER
37	9800837	SCREW
38	9800838	OSCILLATING PLATE ASM.
39	9800839	SCREW
40	6001612	SCREW
41	9800841	UPPER KNIFE
42	6001416	WASHER
43	3200804	SCREW
44	9800844	LOWER KNIFE BASE CONNECTION
45	9800407	SCREW
46	9800846	LOWER KNIFE ADJUST PLATE
47	6001443	NUT
48	9800848	SCREW
49	6001416	WASHER
50	9800850	SCREW
51	9800851	LOWER KNIFE BASE
52	9800852	SCREW
53	9800853	SCREW
54	9800854	SPRING
55	9800855	SPRING ADJUST
56	6001610	NUT
57	9800857	SCREW
58	6001443	NUT
59	9800859	LOWER KNIFE
60	9800860	SCREW
61	9800861	LOWER KNIFE STOPPER
62	6001023	SCREW
63	9800863	PLATE
64	6001009	SCREW

BAG CLOSER PARTS FOR N980A,N980AW

9. CUTTER PARTS (FOR N980A, N980AW)

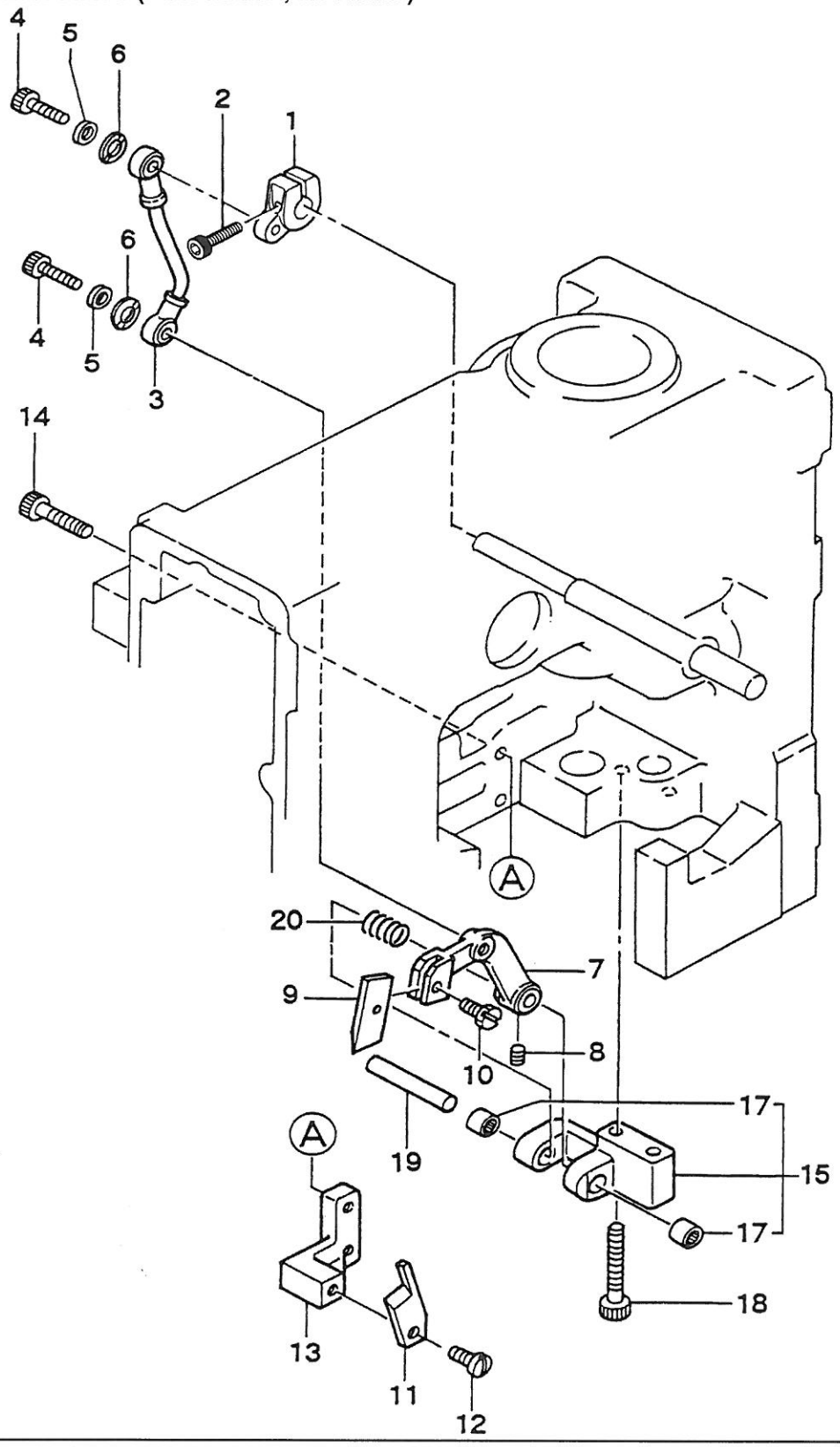

BAG CLOSER PARTS FOR N980A, N980AW

ITEM	PART NO.	DESCRIPTION
1	9800651	KNIFE LEVER A
2	9800652	SCREW
3	9800903	BALL JOINT ROD
4	9800121	SCREW
5	9800905	WASHER
6	9800906	SPRING WASHER
7	9800907	KNIFE LEVER B
8	9800908	SCREW
9	9800909	KNIFE B
10	9800524	SCREW
11	9800911	KNIFE A
12	9800912	SCREW
13	9800913	KNIFE BASE
14	9800914	SCREW
15	9800915	KNIFE LEVER BASE ASM.
17	9800646	NEEDLE BEARING
18	9800918	SCREW
19	9800919	KNIFE LEVER PIN
20	9800920	KNIFE LEVER SPRING

BAG CLOSER PARTS FOR N980AW, N980ACW

10. THREAD TENSION & NEEDLE THREAD OILER

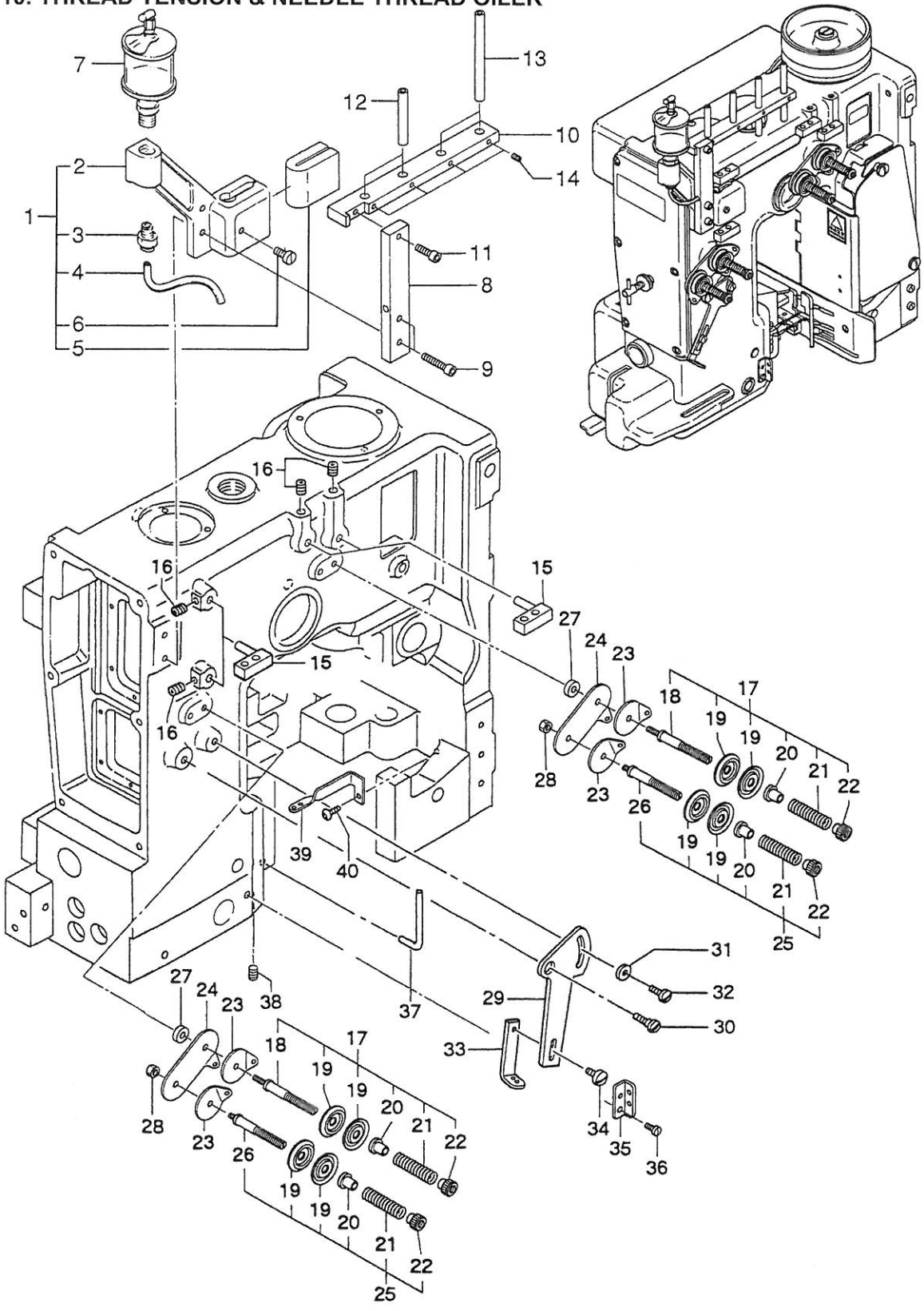

BAG CLOSER PARTS FOR N980AW, N980ACW

ITEM	PART NO.	DESCRIPTION
1	9801001	NEEDLE THREAD OILER ASS'Y
2	9801002	NEEDLE THREAD OILER
3	9800238	TUBE FITTING, STRAIGHT
4	9801004	OILE TUBE
5	9800240	FELT
6	9801006	SCREW
7	9800242	OILE
8	9801008	THREAD GUIDE HOLDER BASE
9	9800914	SCREW
10	9801010	THREAD GUIDE HOLDER
11	9800802	SCREW
12	9800210	FRAME THREAD EYELET
13	9801013	FRAME THREAD EYELET
14	9800220	SCREW
15	9801015	THREAD EYELET
16	9800220	SCREW
17	9801017	THREAD TENSION ASS'Y
18	9801018	TENSION POST
19	6001013	TENSION DISC
20	9801020	TENSION POST FERRULE
21	9801021	TENSION SPRING
22	9800206	TENSION NUT
23	9801023	TENSION THREAD GUIDE
24	9801024	TENSION THREAD GUIDE
25	9801025	THREAD TENSION ASS'Y
26	9801026	TENSION POST
27	9801027	COLLAR
28	9801028	NUT
29	9800213	NEEDLE THREAD CONTROLLER A
30	9800214	SCREW
31	6001416	WASHER
32	6001435	SCREW
33	9801033	NEEDLE THREAD CONTROLLER B
34	6001016	SCREW
35	9801035	NEEDLE THREAD GUIDE
36	6001009	SCREW
37	9800219	NEEDLE THREAD GUIDE
38	9800220	SCREW
39	9801039	LOOPER THREAD GUIDE
40	9800222	SCREW

BAG CLOSER PARTS FOR N980AW,N980ACW

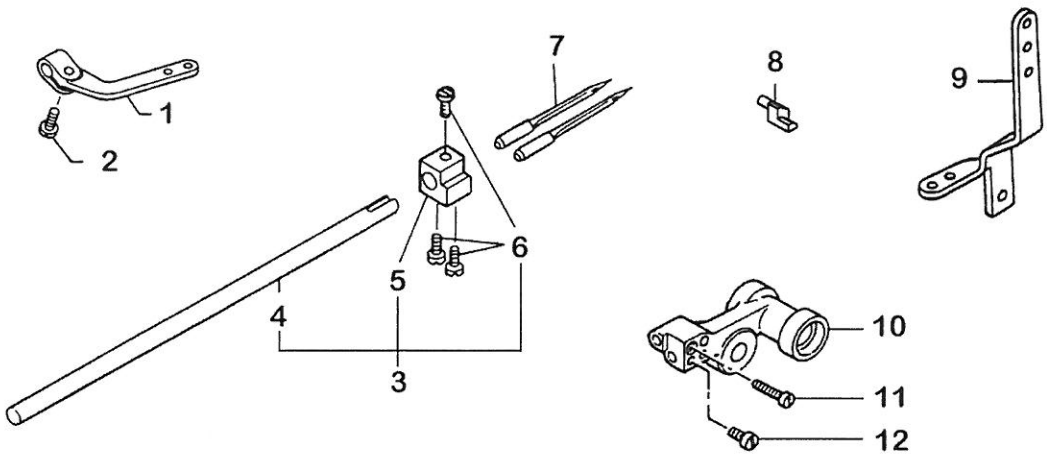

FOR N980AW

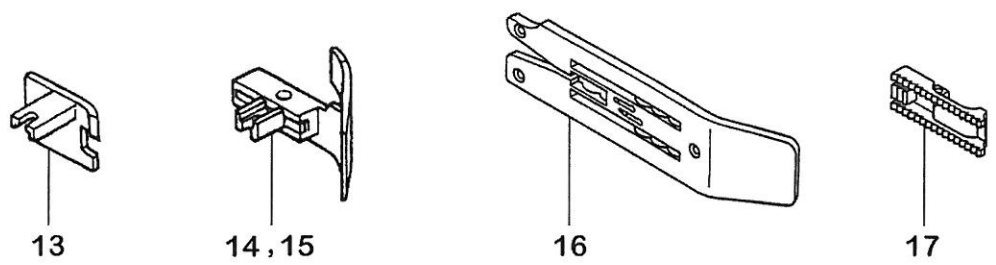

FOR N980ACW

FOR JUTE BAG

FOR BAG MOUTH FOLDER

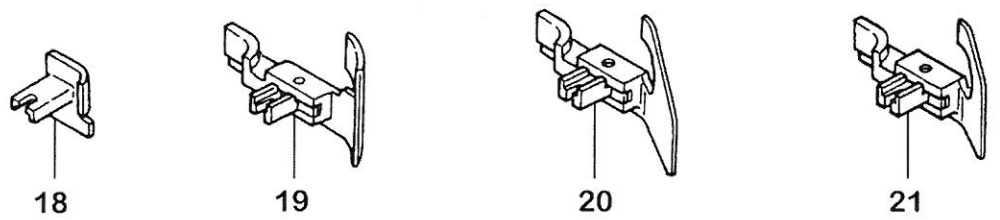

FOR HAND FEED

FOR HAND FEED

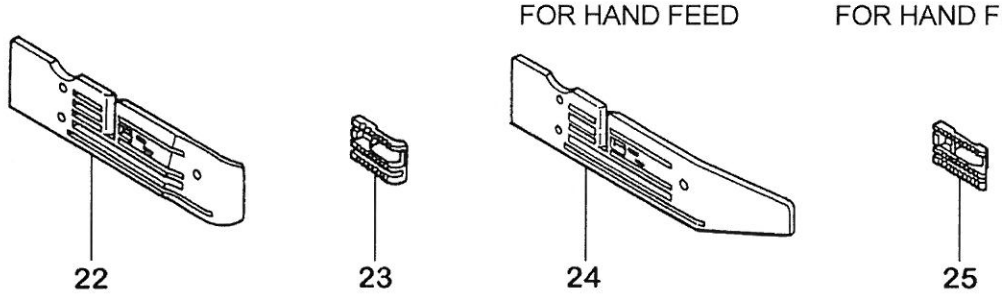

BAG CLOSER PARTS FOR N980AW, N980ACW

ITEM	PART NO.	DESCRIPTION
1	9801101	NEEDLE THREAD TAKE-UP
2	9800109	SCREW
3	9801103	NEEDLE BAR ASS'Y
4	9801104	NEEDLE BAR
5	9801105	NEEDLE HOLDER
6	6001411	SCREW
7	9800423	NEEDLE
8	9801108	NEEDLE GUIDE
9	9801109	LOOPER THREAD TAKE-UP
10	9801110	LOOPER ROCKER
11	9801111	SCREW
12	9801112	SCREW
13 △	9801113	PRESSER FOOT, RIGHT
14 △	9801114	PRESSER FOOT ASS'Y, LEFT
15 *△	9801115	PRESSER FOOT ASS'Y, LEFT FOR JUTE BAG
16 △	9801116	THROAT PLATE
17 △	9801117	FEED DOG
18 ▲	9801118	PRESSER FOOT, RIGHT
19 ▲	9801119	PRESSER FOOT ASS'Y, LEFT
20 *▲	9801120	PRESSER FOOT ASS'Y, LEFT FOR JUTE BAG
21 *▲	9801121	PRESSER FOOT ASS'Y, LEFT FOR MOUTH FOLDER
22 ▲	9801122	THROAT PLATE
23 ▲	9801123	FEED DOG, FRONT
24 *▲	9801124	THROAT PLATE FOR HAND FEED
25 *▲	9801125	FEED DOG, FRONT FOR HAND FEED

△ FOR N980AW
▲ FOR N980ACW
* SPECIAL ORDER

BAG CLOSER PARTS FOR ACCESSORIES

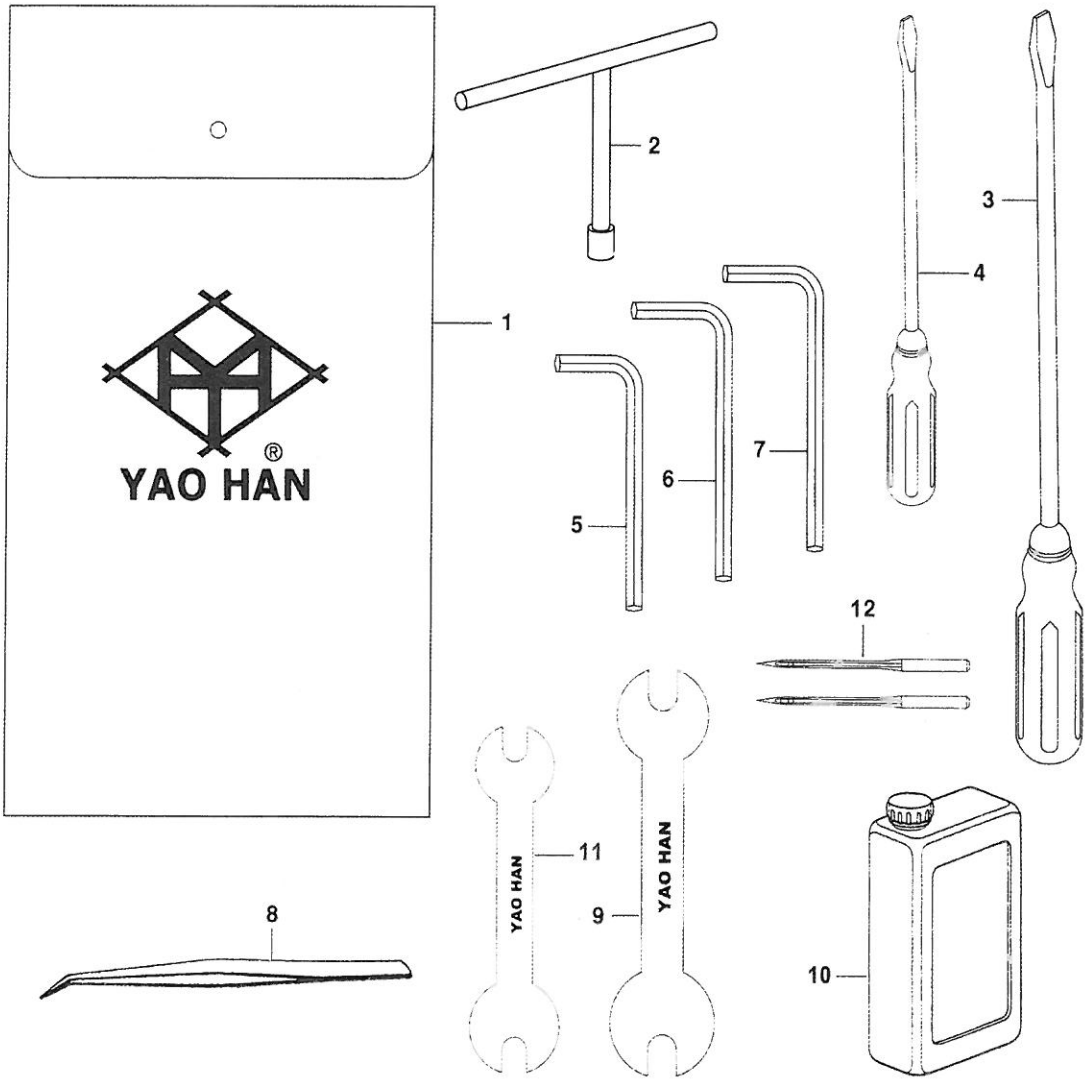

BAG CLOSER PARTS FOR ACCESSORIES

ITEM	PART NO.	DESCRIPTION
1	6003401	ACCESSORY BAG
2	9801202	SOCKET WRENCH
3	9801203	SCREW DRIVER (LARGE)
4	9801204	SCREW DRIVER (SMALL)
5	6003407	NEEDLE SET SCREW 3.0 WRENCH
6	9801206	NEEDLE SET SCREW 4.0 WRENCH
7	3002407	NEEDLE SET SCREW 5.0 WRENCH
8	9801208	BENT TWEEZER W/PIN
9	9801209	SPANNER 10mm x 12mm
10	9801210	OIL 1L/BOX
11	6003403	SPANNER 8mm x 9.5mm
12	9800423	NEEDLE

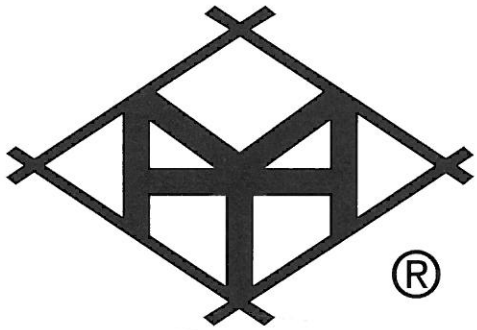

耀瀚股份有限公司

YAO HAN INDUSTRIES CO., LTD.

All copyright are reserved 版權所有・禁止仿冒

2005.06.2000